PRODUCT SPECIFICATION

PRODUCT: CERAMIC DISC CAPACITOR SAFETY RECOGNIZED

TYPE: AC SERIES

CUSTOMER:

DOC. NO.: POE-D11-02-E-24

APPROVED BY CUSTOMER

VENDOR：

☐ **WALSIN TECHNOLOGY CORPORATION**
566-1, KAO SHI ROAD,YANG-MEI
TAO-YUAN, TAIWAN

1. **PAN OVERSEAS (GUANGZHOU) ELECTRONIC CO.,LTD.**
NO.277,HONG MING ROAD,EASTERN SECTION,
GUANG ZHOU ECONOMIC AND TECHNOLOGY
DEVELOPMENT ZONE,CHINA

1. **DONGGUAN WALSIN TECHNOLOGY ELECTRONICS CO., LTD.**
NO.638, MEI JING WEST ROAD,XINIUPO,ADMINISTRATIVE
ZONE,DALANGTOWN,DONGGUAN CITY, GUANGDONG PROVINCE

MANUFACTURE SITE：

☑ **PAN OVERSEAS (GUANGZHOU) ELECTRONIC CO.,LTD.**
NO.277,HONG MING ROAD,EASTERN SECTION,
GUANG ZHOU ECONOMIC AND TECHNOLOGY
DEVELOPMENT ZONE,CHINA

Record of change

Date	Version	Description	page
2008.6.3	1	1. C23-00-C-01(before) → POE-C11-00-C-01(1st edition)	
2008.8.22	2	1 Complete lead code 2. Add last SAP code " H" for halogen and Pb free , epoxy resin..	20 3
2008.12.12	3	1.Complete the 13th to 17th codes of SAP P/N. 2. Page layout adjustment.	4
2009.7.16	4	1 Change PSA & POE logo to Walsin & POE logo. 2.Complete Marking statement. 3. Revised standard NO. of SEV, SEMKO, FIMKO, NEMKO, DEMKO and KEMA. Revised recognized NO. of FIMKO, NEMKO, DEMKO ,KEMA and CQC. 4. Downsize：	9 11 6
2009.9.14	5	1. "Protrusion length": "+0.5 to-1.0" revised to "2.0max (Or the end of lead wire may be inside the tape.)"	9
2009.12.24	6	1. Marking 2. Correct recognized No 3. Revised the Figure of impulse voltage test(Item 7.3.14) according to the standard IEC 60384-14 ed.3	10 11 14
2011/1/13	7	1. Review SAP P/N about diameter code: 2. Delete "AT" taping type. 3. Add test item "Temperature Cycle ". 4. Add item 10 "Drawing of internal structure and material list"	6 4,5,8,9 15 20
2011/4/27	8	1. Add "1AC" type; 2. Delete "old P/N" 3. Define the marking of the type "0AC" and "1AC"; 4. Review the "Standard No. & Subclass & W.V. & Recognized No".	4 6 8 9
2012/2/7	9	1. Review the "Standard No. & Subclass & W.V. & Recognized No". 2. Review the "Operating Temperature Range" from "-25 to +125°C" to "-40 to +125°C" 3. Review the temperature of Step 1from "-25+0/-3" to "-40+0/-3"	9 10 14
2012/4/6	10	1. In order to improve the traceability of the product, change the date code on capacitor body, new date code can trace back to production "Lot No."	8
2013/5/6	11	1. Review the Lead diameter φ from 0.60 +0.1/-0.05mm to 0.55+/-0.05mm 2. In order the customer to know the round time of manufacture, review the date code on capacitor body, new date code can know the month of manufacture. 3. Delete "No marked with " _" stand for Pb free". Add "epoxy resin" 4. Review the Solderability time from 2±0.5s to 5±0.5s	5,6,7 8 8 11
2013/10/16	12	1. Review the "Manufactured Date" to "Products ID" on the marking page 2. Delete "The marking can be printed on either one side or two side of coating body."and add "for SAP part number 10-11 digits ≤'07' products"to two sides and "for SAP part number 11-12 digits ≥'08 'products"to one side.	8 8
2014/11/5	13	1. Review the terminal position of the lead wire. 2. Review the product of ID, add the code "D" for the products of Dongguan Walsin Technology Electronics Co., Ltd. 3. Review the minimum packing quantity of taping code AM.	8 9 16
2014/12/25	14	1. Add"3.1Norminal parts&3.2 special for surge parts" for "3. Part Numbering /T.C/Capacitance/ Tolerance/Diameter"	7
2015/5/27	15	Add the X1:440Vac/Y2:300Vac safety approval for CQC.	4,10
2015/8/4	16	Delete the H(Inside kink lead)	5,8

Record of change (continue)

Date	Version	Description	page
2015/11/12	17	1. Review the normal parts of Taping type 2. Review Marking	6,7 9
2016/1/27	18	1. Review the Available lead code of Lead Configuration 2. Revised standard NO. of VDE, SEV, SEMKO, FIMKO, NEMKO, DEMKO and KTL.	5 10
2016/5/3	19	1. Delete 6 pF~10 pF for P/N CH*AC***D06＊＊, 12 pF~15 pF for P/N CH*AC120J06＊＊,18 pF~24 pF for P/N CH*AC***J07＊＊, 27 pF~33 pF for P/N CH*AC***J08＊＊, and 36 pF~39 pF for P/N CH*AC***J09＊＊.	6
2016/11/1	20	1. Review the Available lead code of Lead Configuration 2. Delete “CH” series. 3. Revised the Marking for 1AC type.	5 4,6,11~15,20 9
2017/6/26	21	1. Revise CQC Standard No.	10
2018/8/11	22	1. Revised standard NO. of VDE, SEV, SEMKO, FIMKO, NEMKO and DEMKO.	10
2019/2/25	23	1. Delete “3.2 Special design parts” for surge withstanding	7
2019/4/24	24	1. “Protrusion length”: “2.0max (Or the end of lead wire may be inside the tape.)” revised to “+0.5to-1.0 (Or the end of lead wire may be inside the tape.)” 2. Add “Soldering Recommendation”	7 18

Table of Contents

1. Part number for SAP system

(Ex.)	YV	0	AC	472	M	10	0	L	20	C	7	H
	(1)	(2)-1	(2)-2	(3)	(4)	(5)	(6)	(7)	(8)	(9)	(10)	(11)

(1)Temperature characteristic (identified code)

CODE	Temperature characteristic	Cap. Change
SL	SL	-1000~+350ppm/℃ (+20℃~+85℃)
YP	Y5P	±10%
YU	Y5U	-55% to +20%
YV	Y5V	-80% ~ +30%

(2)-1 Rated voltage(identified by 1-figure code)：0 = X1:400Vac/Y2:250Vac; 1 = X1:440Vac/Y2:300Vac (Only Approval by VDE/ENEC/UL/CSA/CQC)

(2)-2 Type(identified by 2-figure code): AC

(3)Capacitance (identified by 3-figure code)：EX.221=220pF

(4)Capacitance tolerance (identified by code)：J:±5%,K:±10%,M:±20%

(5)Nominal body diameter dimension (identified by 2-figure code) : 06--Dmax7.0mm, 07--Dmax8.0mm...

(6)Internal code: 0--Normal, other code--Special control

(7)Lead Style：Refer to “2. Mechanical”.

(8)Packing mode and lead length (identified by 2-figure code)

Taping Code	Description
AF	Ammo box and product pitch：15.0 mm
AM	Ammo box and product pitch：25.4 mm

Bulk Code	Description
03	Lead length： 3.0mm
3E	Lead length： 3.5mm
04	Lead length： 4.0mm
4E	Lead length： 4.5mm
20	Lead length：20.0mm

(9) Tolerance of lead length

Code	Description
A	±0.5 mm (only for kink lead type)
B	±1.0 mm
C	Min.
D	Taping special purpose

(10)Lead space

Code	Description
7	7.5±1.0 mm
M	7.5±0.5 mm
0	10±1.0 mm
A	10±0.5 mm

(11)Epoxy resin code

Code	Description
B	Halogen and Pb free , epoxy resin.
H	

2. Mechanical

Encapsulation：Epoxy resin, flammability UL94 V-0

Available lead code(unit: mm)

Lead type	SAP P/N (13-17)digits	Lead space (F)	Lead Length (L)	Packing	Lead Configuration
Lead style：L or B Type L or B Straight long lead	L03B7	7.5 ± 1.0	3.0 ± 1.0	Bulk	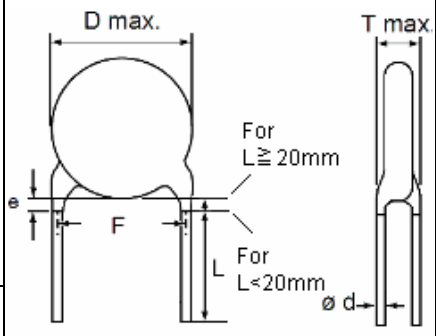
	L4EB7	7.5 ± 1.0	4.5 ± 1.0		
	L05B7	7.5 ± 1.0	5.0 ± 1.0		
	L03B0	10 ± 1.0	3.0 ± 1.0		
	L4EB0	10 ± 1.0	4.5 ± 1.0		
	L05B0	10 ± 1.0	5.0± 1.0		
	L20C7	7.5 ±1.0	20 min.		
	L20C0	10 ± 1.0	20 min.		
	BAFD7	7.5 ±1.0	Refer to “4. Taping format”	Tap. Ammo	
	BAMD7	7.5 ±1.0			
	BAMD0	10 ± 1.0			
Lead style：G Type G Straight lead	G03A7	7.5 ± 1.0	3.0 ± 0.5	Bulk	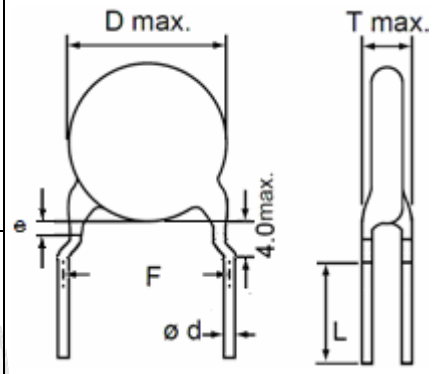
	G3EA7	7.5 ± 1.0	3.5 ± 0.5		
	G04A7	7.5 ± 1.0	4.0 ± 0.5		
	G03A0	10 ± 1.0	3.0 ± 0.5		
	G3EA0	10 ± 1.0	3.5 ± 0.5		
	G04A0	10 ± 1.0	4.0 ± 0.5		
	GAFD7	7.5 ±1.0	Refer to “4. Taping format”	Tap. Ammo	
	GAMD7	7.5 ±1.0			
	GAMD0	10 ± 1.0			
Lead style：D Type D Vertical kink lead	D03A7	7.5 ± 1.0	3.0 ± 0.5	Bulk	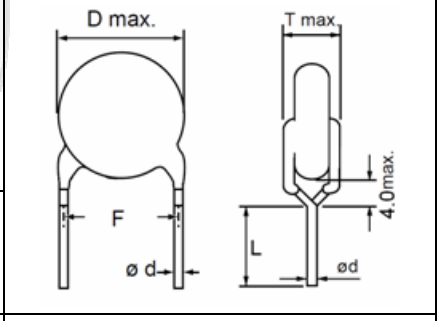
	D3EA7	7.5 ± 1.0	3.5 ± 0.5		
	D04A7	7.5 ± 1.0	4.0 ± 0.5		
	D03A0	10 ± 1.0	3.0 ± 0.5		
	D3EA0	10 ± 1.0	3.5 ± 0.5		
	D04A0	10 ± 1.0	4.0 ± 0.5		
	DAFD7	7.5 ±1.0	Refer to “4. Taping format”	Tap. Ammo	
	DAMD7	7.5 ±1.0			
	DAMD0	10 ± 1.0			
Lead style：X Type X Outside kink lead	X03A7	7.5 ± 1.0	3.0 ± 0.5	Bulk	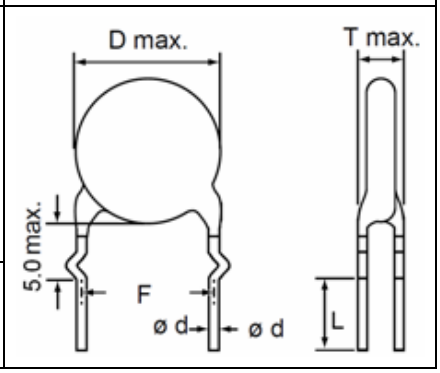
	X3EA7	7.5 ± 1.0	3.5 ± 0.5		
	X04A7	7.5 ± 1.0	4.0 ± 0.5		
	X05B7	7.5 ± 1.0	5.0 ± 1.0		
	X03A0	10 ± 1.0	3.0 ± 0.5		
	X3EA0	10 ± 1.0	3.5 ± 0.5		
	X04A0	10 ± 1.0	4.0 ± 0.5		
	X05B0	10 ± 1.0	5.0 ± 1.0		
	XAFD7	7.5 ±1.0	Refer to “4. Taping format”	Tap. Ammo	
	XAMD7	7.5 ±1.0			
	XAMD0	10 ± 1.0			

* Lead diameter Φd: 0.55+/-0.05mm

* e (Coating **extension** on leads): 3.0mmMax for straight lead style; Not exceed the kink for kink lead.

3. Part numbering/T.C/Capacitance/ Tolerance/Diameter：

3.1 Normal parts:

SAP Part. No.	T.C.	Capacitance	Tolerance	Dimensions (unit：mm)				
				D (max)	T (max)	F Bulk type	F Taping type	φd
SL*AC***J060*	SL	10,12,15,18,20,22,24,27,30,33, 36,39,47,50,51(pF)	±5%	7.0	5.0	7.5±1, 10±1	7.5±1 (AFD7)	0.55+/-0.05
SL*AC***J070*		56,62, 68,75(pF)	±5%	8.0				
SL*AC820J080*		82pF	±5%	9.0				
SL*AC101J090*		100pF	±5%	10.0				
YP*AC101K060*	Y5P	100 pF	±10%	7.0				
YP*AC151K060*		150 pF	±10%	7.0				
YP*AC221K060*		220 pF	±10%	7.0				
YP*AC331K060*		330 pF	±10%	7.0				
YP*AC471K060*		470 pF	±10%	7.0				
YP*AC561K070*		560pF	±10%	8.0				
YP*AC681K070*		680 pF	±10%	8.0				
YP*AC821K080*		820 pF	±10%	9.0				
YP*AC102K080*		1000 pF	±10%	9.0				
YU*AC102M060*	Y5U	1000 pF	±20%	7.0			7.5±1 (AFD7) Or 10±1 (AMD0)	
YU*AC152M080*		1500 pF	±20%	9.0				
YU*AC222M080*		2200 pF	±20%	9.0				
YU*AC332M100*		3300 pF	±20%	11.0				
YU*AC392M120*		3900 pF	±20%	13.0			7.5±1 (AMD7) Or 10±1 (AMD0)	
YU*AC472M120*		4700 pF	±20%	13.0				
YV*AC102M060*	Y5V	1000 pF	±20%	7.0			7.5±1 (AFD7) Or 10±1 (AMD0)	
YV*AC152M060*		1500 pF	±20%	7.0				
YV*AC222M060*		2200 pF	±20%	7.0				
YV*AC332M080*		3300 pF	±20%	9.0				
YV*AC392M100*		3900 pF	±20%	11.0				
YV*AC472M100*		4700 pF	±20%	11.0				
YV*AC682M120*		6800 pF	±20%	13.0			7.5±1 (AMD7) Or 10±1 (AMD0)	
YV*AC103M140*		10000 pF	±20%	15.0				

4. Taping Format

- **15 mm pitch/lead spacing 7.5mm taping**

Lead Code: *BAFD7 & *DAFD7 & *XAFD7 &*GAFD7

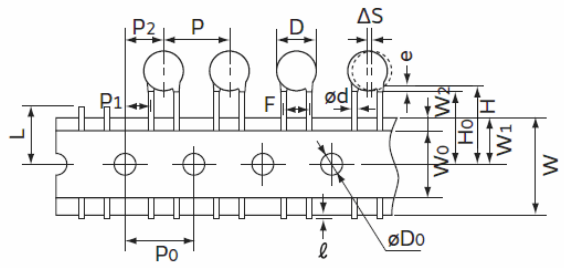

- **25.4mm pitch/lead spacing 7.5mm & 10.0mm taping**

Lead Code: *BAMD* & *DAMD* & *XAMD* &*GAMD*

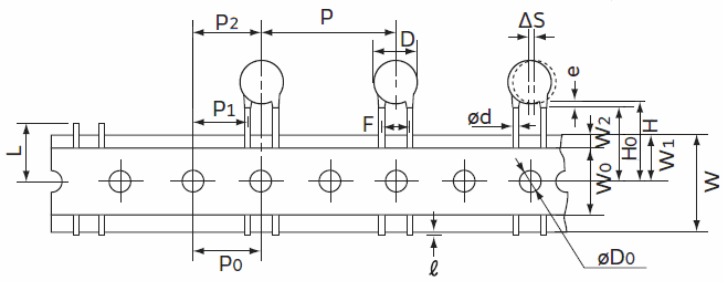

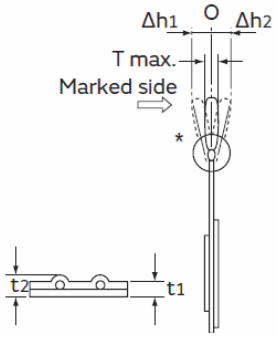

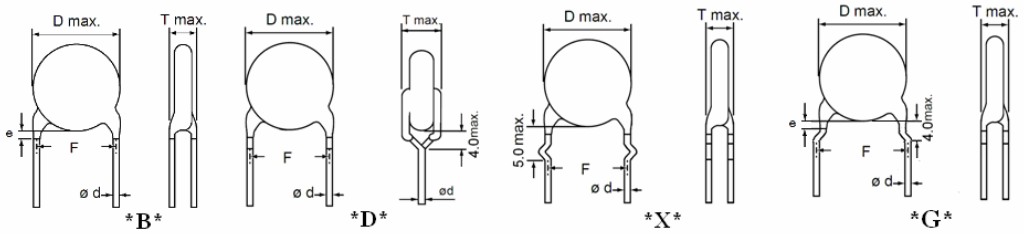

POE Part Number		*BAFD7 / *DAFD7 *XAFD7 / *GAFD7	*BAMD7 / *DAMD7 *XAMD7 / *GAMD7	*BAMD0 / *DAMD0 *XAMD0 / *GAMD0
Item	Symbol	Dimensions (mm)	Dimensions (mm)	Dimensions (mm)
Pitch of component	P	15.0±1.0	25.4±2.0	25.4±2.0
Pitch of sprocket	P0	15.0±0.3	12.7±0.3	12.7±0.3
Lead spacing	F	7.5±1.0	7.5±1.0	10.0±1.0
Length from hole center to component center	P2	7.5±1.5	12.7±1.5	12.7 ± 1.5
Length from hole center to lead	P1	3.75±1.0	8.95±1.0	7.7±1.5
Body diameter	D	See the “3. Part numbering/T.C/Capacitance/ Tolerance/Diameter”		
Deviation along tape, left or right	△S	0±2.0		
Carrier tape width	W	18.0 +1/-0.5		
Position of sprocket hole	W1	9.0±0.5		
Lead distance between the kink and center of sprocket hole	H0	18.0+2.0/-0 (For: *DAFD7 / *XAFD7/ *GAFD7)	18.0+2.0/-0 (For: *DAMD7 / *XAMD7 / *GAMD7)	18.0+2.0/-0 (For: *DAMD0 / *XAMD0 / *GAMD0)
Lead distance between the bottom of body and the center of sprocket hole	H	20.0+1.5/-1.0 (For: *BAFD7)	20.0+1.5/-1.0 (For: *BAMD7)	20.0+1.5/-1.0 (For: *BAMD0)
Length from the terminal of the lead wire to the edge of carrier tape	ℓ	+0.5 to -1.0 (Or the end of lead wire may be inside the hole-down tape.)		
Diameter of sprocket hole	D0	4.0±0.2		
Lead diameter	φd	0.55±0.05		
Total tape thickness	t1	0.6±0.3		
Total thickness, tape and lead wire	t2	1.5 max.		
Deviation across tape	△h1/△h2	2.0 max.		
Portion to cut in case of defect	L	11.0 max.		
Hole-down tape width	W0	8.0 min		
Hole-down tape distortion	W2	1.5±1.5		
Coating extension on leads	e	3.0 max for straight lead style; Not exceed the kink leads for kink lead.		
Body thickness	T	See the “3. Part numbering/T.C/Capacitance/ Tolerance/Diameter”		

CERAMIC DISC CAPACITOR SAFETY RECOGNIZED, AC SERIES	POE-D11-02-E-24	Ver : 24	Page: 8 / 19

5.Marking：

1.Type Designation	AC
2.Nominal Capacitance	Identified by 3-Figure Code. Ex. 47pF→"47"，470pF→"471"
3.Capacitance Tolerance	J:±5%,K:±10%,M:±20%
4.Company Name Code(Trade mark)	UK
5. Products ID	Abbreviation ex. Manufacture year: ← 9 C 6 1234 → Last 4 digits of lot no. → Individual specification code → Manufacture month: 1:January 2:Feruary ⋮ 9:September O:October N:November D:December 9:2019 0:2020 1:2021 ⋮ Manufactory: C:Pan overseas (Guangzhou) Epoxy resin code: "_": Haglogen and Pb free epoxy resin (For the last code "H" and "B" of SAP P/N)

6.Approved monogram:

6.1 VDE	or	6.3 CSA		6.5 NEMKO		6.7 FIMKO		6.9 CQC	
6.2 UL		6.4 SEMKO		6.6 DEMKO		6.8 SEV			

Marking Ex.:	Type	**Two sides marking** （for SAP part number 10-11 digits ≤ "07" products）	**One side marking** （for SAP part number 10-11 digits ≥ "08" products）
	0AC (X1:400Vac/ Y2:250Vac)	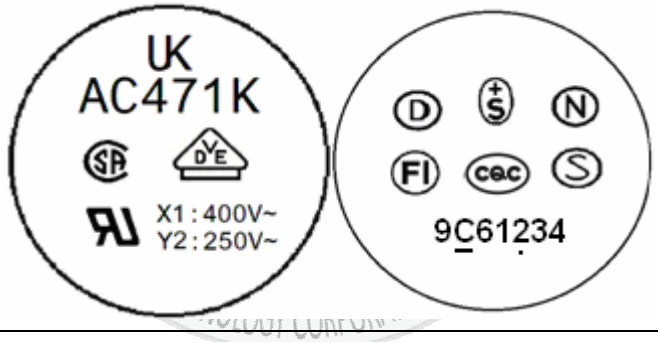	
	1AC (X1:440Vac/ Y2:300Vac)	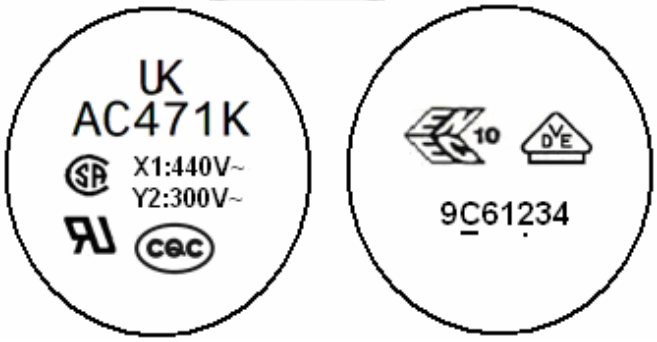	

∗The marking shall be easily legible.

∗"**C**", Marked with code " _ " stand for Halogen and Pb free epoxy resin.

∗" • "：Individual specification code, it is added under the lot no.

6. Scope

THIS SPECIFICATION APPLIES TO CERAMIC INSULATED CAPACITORS DISK TYPE USED IN ELECTRONIC EQUIPMENT.

1. VDE/SEV/SEMKO/FIMKO/NEMKO/DEMKO/ UL/CSA recognized capacitor for Antenna coupling and AC line-by-pass.X1, Y2 Capacitor based on IEC 60384-14
   "UL, CSA recognized for across-the-line, line-by-pass" and antenna-isolation.

2.Approval Standard and Recognized No.

Safety Standard	Standard No.	Subclass	w.v.	Recognized No.
UL	ANSI/UL 60384-14:2013	X1	400VAC or 440VAC	E146544
		Y2	250VAC or 300VAC	
CSA	CAN/CSA E60384-14:2009	X1	400VAC or 440VAC	2347969
		Y2	250VAC or 300VAC	
VDE (ENEC)	EN 60384-14:2013/A1:2016 IEC 6.384-14:2013 IEC 6.384-14:2013/AMD1:2016	X1	400VAC or 440VAC	40001829
		Y2	250VAC or 300VAC	
SEV	EN 60384-14:2013 + A1:16	X1	400VAC or 440VAC	18.0653
		Y2	250VAC or 300VAC	
SEMKO	EN 60384-14:2013+A1	X1	400VAC or 440VAC	1811994
		Y2	250VAC or 300VAC	
FIMKO	EN 60384-14:2013 + A1:16	X1	400VAC or 440VAC	NSC FI 30460
		Y2	250VAC or 300VAC	
NEMKO	EN 60384-14:2013;A1	X1	400VAC or 440VAC	P18222947
		Y2	250VAC or 300VAC	
DEMKO	EN 60384-14:2013	X1	400VAC	D-03994-A1
		Y2	250VAC	
CQC	GB/T6346.14-2015	X1:400VAC /Y2:250VAC		CQC08001026519
	IEC60384-14:2013	X1: 440VAC /Y2:300VAC		CQC15001121984
KTL	K60384-14 2006	X1	400VAC or 440VAC	SU03065-14001A
		Y2	250VAC	SU03065-14002A
		Y2	300VAC	SU03065-14003A

7. Specification and test method

7.1 Operating Temperature Range :

-40 to +125°C

7.2 Test condition:

Test and measurement shall be made at the standard condition. (temperature 15~35℃, relative humidity 45~75% and atmospheric pressure 860~1060hpa). Unless otherwise specified herein.

If doubt occurred on the value of measurement, and measurement was requested by customer capacitors shall be measured at the reference condition. (temperature 20±2℃or25 ± 2℃, relative humidity 60~70% and atmospheric pressure 860~1060hpa.)

7.3 Performance:

<table>
<tr><th colspan="3">Item</th><th>Specification</th><th>Testing Method</th></tr>
<tr><td rowspan="2">1</td><td rowspan="2">Dielectric Strength</td><td>Between lead wires</td><td>No failure.</td><td>The capacitors shall not be damage when AC2600V(rms.) are applied between the lead wires for 60 sec. (Charge/Discharge current □ 50mA.)</td></tr>
<tr><td>Body Insulation</td><td>No failure.</td><td>First the terminal of capacitor shall be connected together. Then a metal foil shall be closely wrapped around the body of the capacitor distance of about 3 to 4 mm from each terminal. Then the capacitor shall be inserted into a container filled with metal balls of about 1 mm diameter. Finally. AC2600V(rms.) is applied for 60 sec. between the capacitor lead wires and metal balls. (Charge/Discharge current □ 50mA.)
 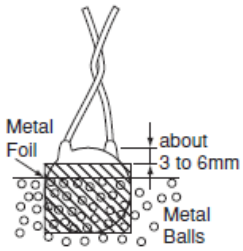
</td></tr>
<tr><td>2</td><td colspan="2">Insulation Resistance(I.R.)</td><td>10000MΩ min.</td><td>The insulation resistance shall be measured with 500±50VDC with 60±5sec. of charging.</td></tr>
<tr><td>3</td><td colspan="2">Capacitance</td><td>Within specified tolerance</td><td rowspan="2">B&E&F: The capacitance shall be measured at 20±2℃with 1kHz±20% and 1.0±0.2V (rms.) or less.
SL: The capacitance shall be measured at 25℃ with 1MHz±20% and1.0±0.2Vrms</td></tr>
<tr><td>4</td><td colspan="2">Dissipation Factor(D.F.) or Q</td><td><table><tr><th>Char.</th><th>Specification</th></tr><tr><td>Y5P, Y5U</td><td>D.F≦2.5%</td></tr><tr><td>Y5V</td><td>D.F≦5.0%</td></tr><tr><td>SL</td><td>Q:
30pF&above:≧1000
Below 30PF:≧400+20×C</td></tr></table></td></tr>
<tr><td>5</td><td colspan="2">Temperature Characteristic</td><td><table><tr><th>Char.</th><th>Capacitance Change</th></tr><tr><td>Y5P</td><td>Within ± 10%</td></tr><tr><td>Y5U</td><td>Within $^{20}_{55}$%</td></tr><tr><td>Y5V</td><td>Within –80 ~ +30%</td></tr><tr><td>SL</td><td>-1000~+350 ppm/℃ (+20℃~+85℃)</td></tr></table></td><td>The capacitance measurement shall be made at each step specified in table 1.
(Table 1)<table><tr><th>Step</th><th>Temperature</th></tr><tr><td>1</td><td>+20±2℃</td></tr><tr><td>2</td><td>-25±2℃</td></tr><tr><td>3</td><td>+20±2℃</td></tr><tr><td>4</td><td>+85±2℃</td></tr><tr><td>5</td><td>+20±2℃</td></tr></table>Pr-treatment：
Capacitor shall be stored at 85±2℃ for 1 hour. Then placed at room condition for 1(※)24±2 hours before measurement</td></tr>
<tr><td rowspan="2">6</td><td rowspan="2">Robustness of Termination</td><td>Tensile</td><td>Lead wire shall not cut off capacitor shall not be broken.</td><td>As shown in the figure at right, fix the body of the capacitor and apply a tensile weight gradually to each lead wire in the radial direction of the capacitor up to 10N and keep it for 10±1 sec.
 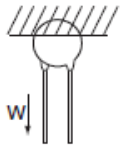
</td></tr>
<tr><td>Bending</td><td>Lead wire shall not cut off capacitor shall not be broken.</td><td>W Each lead wire should be subjected to 5N of weight and bent 90° at the point of egress, in one direction, then returned to its original position and bent 90° in the opposite direction at the rate of one bend in 2 to 3 sec.</td></tr>
</table>

※ “room condition” temperature：15~35℃, humidity：45~75%,atmospheric pressure：86~106kPa

Item			Specification	Testing Method
7	Solderability of leads		Lead wire should be soldered with uniform coating on the axial direction over 3/4 of the circumferential direction.	The lead wire of capacitor should be dipped into molten solder for 5 ± 0.5 sec. The depth of immersion is up to about 1.5 to 2.0 mm from the root of lead wires. Temp. of solder ：Lead free solder (Sn-3Ag –0.5Cu) 245 ± 5 ℃
8	Soldering Effect (Non-Preheat)	Appearance	No marked defect	As shown in figure, the lead wires should be immersed in solder of 350 ± 10 ℃ or 260 ± 5 ℃ up to 1.5 to 2.0mm from the root of Terminal for 3.5 ± 0.5 sec (10 ± 1 sec for 260± 5 ℃) 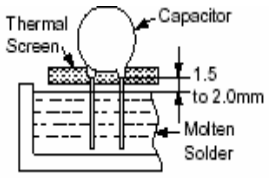 Pre-treatment: Capacitor shall be stored at 85±2℃ for 1hour.then placed at ※1room condition for 24±2hours before initial measurements. Post-treatment: Capacitor shall be stored for 1 to 2hours at ※1room condition.
		I.R.	1000MΩ min.	
		Dielectric Strength	Per Item 1.	
		Capacitance	Y5P,Y5U,Y5V： Within ±10% SL： Within±2.5% or ±0.25pF,Whichever is large.	
	Soldering Effect (On-Preheat)	Appearance	No marked defect.	First the capacitor should be stored at 120 + 0 / -5 ℃ for 60 + 0 / -5sec. Then, as in figure , the lead wires should be immersed solder of 260 + / -5 ℃ up to 1.5 to 2.0 mm from the root of terminal for 7.5 +0 / -1 sec. 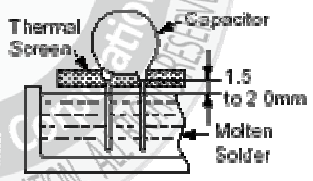 Pre-treatment: Capacitor shall be stored at 85±2℃ for 1hour.then placed at ※1room condition for 24±2hours before initial measurements. Post-treatment: Capacitor shall be stored for 1 to 2hours at ※1room condition.
		I.R.	1000MΩ min.	
		Dielectric Strength	Per Item 1.	
		Capacitance	Y5P,Y5U,Y5V： Within ±10% SL： Within±2.5% or ±0.25pF,Whichever is large.	

Item			Specification	Testing Method
9	Humidity (Under Steady State)	Appearance	No marked defect.	Set the capacitor for 500±12 hours at 40±2℃, in 90 to 95% humidity. Then capacitor shall be stored for 1 to 2 hours at room condition.
		Capacitance	Y5P： Within ±10% Y5U： Within ±20% Y5V： Within ±30% SL： Within±2.5% or ±0.25pF,Whichever is large.	
		D.F.	Y5P,Y5U：5.0% max. Y5V：7.5% max.	
10	Humidity Loading	Q	SL： Less than 30pF=> Q≧ 100+10×C/3 More than 30pF=> Q≧ 200	Apply the rated voltage for 500±12 hours at 40±2℃, in 90 to 95% humidity and set it for 1 to 2 hours at room condition.
		I.R.	Y5P,Y5U,Y5V： 3000MΩ min. SL： 1000MΩ min.	
11	Life	Appearance	No marked defect.	Impulse Voltage: Each individual capacitor shall be subjected to a 5kv impulses for three times. After the capacitors are applied to life test. Fig. 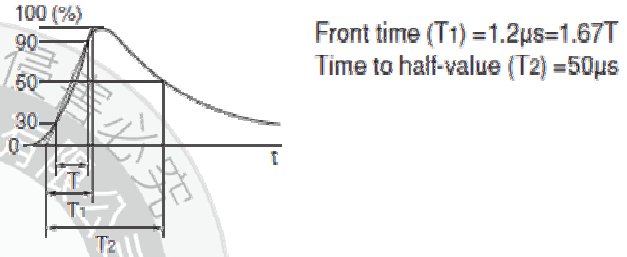 The specimen capacitors are placed in a circulating air oven for a period of 1000 hrs. The air in the oven is maintained at a temperature of 125±2℃. Throughout the test. The capacitors are subjected to an AC425Vrms.(for 0AC type) or AC510Vrms.(for 1AC type) alternating voltage of mains frequency. Except that once each hour the voltage id increased to 1000Vrms for 0.1sec.
		Capacitance	Y5P,Y5U,Y5V： Within ±20% SL： Within±3% or ±0.3pF,Whichever is large.	
		I.R.	3000MΩ min. SL： 1000MΩ min.	
		Dielectric Strength	Per Item 1.	
12	Passive Flammability		The burning time shall not be exceeded the time 30 sec. The tissue paper shall not ignite.	The capacitor under test shall be held in the flame in the position, which best promotes burning. Each specimen shall only be exposed once to the flame. Time of exposure to flame：30 sec Length of flame：12±1 mm Gas burner：Length 35 mm min. Inside Dia.：0.5±0.1 mm Outside Dia.：0.9 mm max. Gas ：Butane gas Purity 95% min. Fig. 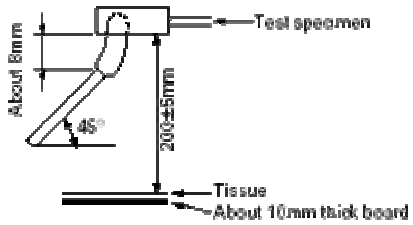

※ “room condition” temperature：15~35℃, humidity：45~75%,atmospheric pressure：86~106kPa

<table>
<tr><th colspan="2">Item</th><th>Specification</th><th>Testing Method</th></tr>
<tr><td>13</td><td>Active Flammability</td><td>The cheesecloth shall not be on fire.</td><td>The specimens shall be individually wrapped in at least one but more then two complete layers of cheesecloth. The specimens shall be subjected to 20 discharges. The interval between successive discharges shall be 5sec. The Uac shall be maintained for 2 min. after the last discharge.
Fig.
 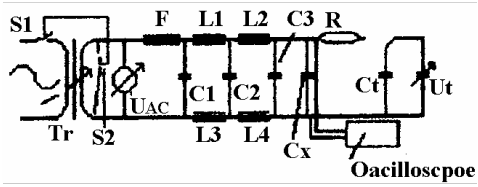

C1,2：1Mf±10%　C3：0.03Mf±5% 10KV
L1-4：1.5Mh±20% 16A Rod core choke
R　：100Ω±2%　Ct：3Mf±5% 10KV
Uac：Ur±5%　Ur：Rated working voltage
Cx　：Capacitor　F　：Fuse, Rated 10A
Ut　：Voltage applied to Ct
 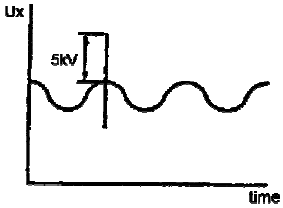
</td></tr>
<tr><td>14</td><td>Temperature Cycle</td><td>Appearance: No marked defect
<table><tr><th>Char.</th><th>Cap. Change</th><th>DF / Q</th></tr><tr><td>SL</td><td>≦±5%</td><td>Q≧275+5/2C (C＜30pF)
Q≧350 (C≧30pF)</td></tr><tr><td>Y5P</td><td>≦±10%</td><td>DF≦5.0%</td></tr><tr><td>Y5U
Y5V</td><td>≦±20%</td><td>DF≦7.5%</td></tr></table>I.R.: 3000MΩ min.
Dielectric strength: Per Item 1</td><td>The capacitor should be subjected to 5 temperature cycles,
<Temperature Cycle time: 5 cycles>
<table><tr><th>Step</th><th>Temperature(℃)</th><th>Time(min)</th></tr><tr><td>1</td><td>-40+0/-3</td><td>30</td></tr><tr><td>2</td><td>Room temp.</td><td>3</td></tr><tr><td>3</td><td>125+3/-0</td><td>30</td></tr><tr><td>4</td><td>Room temp.</td><td>3</td></tr></table>Pre-treatment:
Capacitor shall be stored at 85±2℃ for 1hour.then placed at※1room condition for 24±2hours.
Post-treatment:
Capacitor shall be stored for 1 to 2hours at ※1room condition.</td></tr>
</table>

※ “room condition” temperature：15~35℃, humidity：45~75%,atmospheric pressure：86~106kPa

8. Packing specification：

8.1 Packing size:

Type	Box	Carton
Bulk	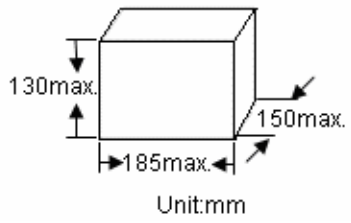	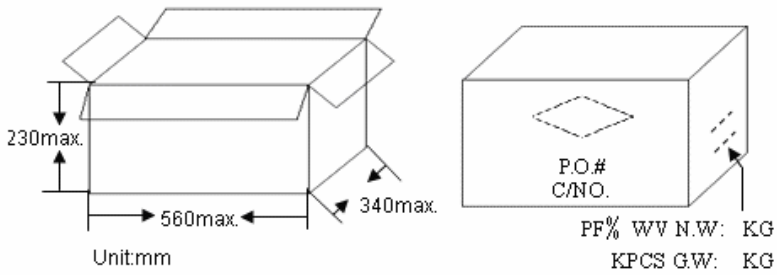
Ammo taping	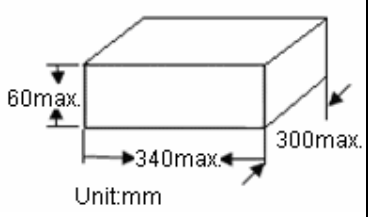	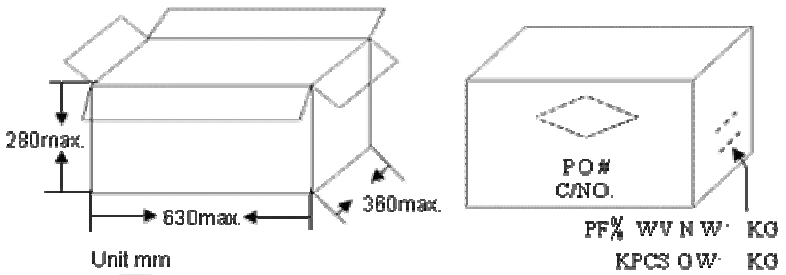

8.2 Packing quantity:

Packing type	The code of 14th to15th in SAP P/N	MPQ(Kpcs/Box)
Taping	AF	1
	AM (The size code≦11)	1
	AM (The size code≧12)	0.5

Packing type	Lead length	Size code of 10th to 11th in SAP P/N	MPQ (Kpcs/Bag)	Kpcs/Box
Bulk	Long lead (L≧20mm)	06~12	0.5	1.5
		13-15	0.5	1
	Short lead (L＜20mm)	06~14	0.5	2
		15	0.2	1
	All	16	0.2	1

9. Notices:

9.1 Caution(Rating):

(1). Operating Voltage

Be sure to maintain the Vp-p value of the applied voltage or the Vo-p which contains DC bias within the rated voltage range.

When the voltage is started to apply to the circuit or it is stopped applying, the irregular voltage may be generated for a transit period because of resonance or switching. Be sure to use a capacitor within rated voltage containing this irregular voltage.

Voltage	DC Voltage	DC+AC Voltage	AC Voltage	Pulse Voltage (1)	Pulse Voltage (2)
Positional Measurement	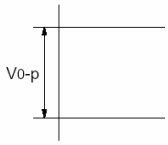	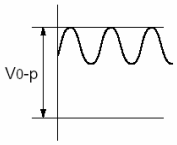	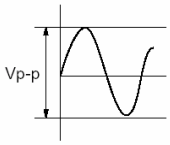	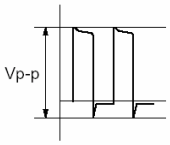	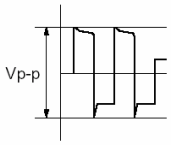

(2). Operating Temperature and Self-generated Heat

Keep the surface temperature of a capacitor below the upper limit of its rated operating temperature range. Be sure to take into account the heat generated by the capacitor itself. When the capacitor is used in a high-frequency current, pulse current or the like, it may have the self-generated heat due to dielectric-loss. Applied voltage should be the load such as self-generated heat is within 20℃ on the condition of atmosphere temperature 25℃. When measuring, use a thermocouple of small thermal capacity-K of φ0.1mm and be in the condition where capacitor is not affected by radiant heat of other components and wind of surroundings. Excessive heat my lead to deterioration of the capacitor's characteristics and reliability.

(3). Test condition for withstanding Voltage

I. Test Equipment

Test equipment for AC withstanding voltage shall be used with the performance of the wave similar to 50/60 Hz sine waves.

If the distorted sine wave or over load exceeding the specified voltage value is applied, the defective may be caused.

II. Voltage Applied Method

When the withstanding voltage is applied, capacitor's lead or terminal shall be firmly connected to the output of the withstanding voltage test equipment, and then the voltage shall be raised from near zero to the test voltage.

If the test voltage without the raise from near zero voltage would be applied directly to capacitor, test voltage should be applied with the *zero cross. At the end of the test time, the test voltage shall be reduced to near zero, and then capacitor's lead or terminal shall be taken off the output of the withstanding voltage test equipment.

If the test voltage without the raise from near zero voltage would be applied directly to capacitor, the surge voltage may arise, and therefore, the defective may be caused.

ZERO CROSS is the point where voltage sine wave pass 0V.- See the right figure.

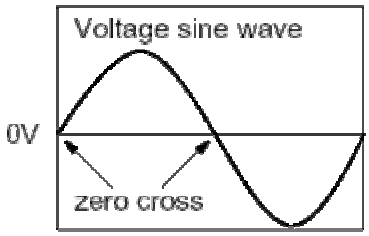

(4). Fail-Safe

When capacitor would be broken, failure may result in a short circuit. Be sure to provide an appropriate fail-safe function like a fuse on your product if failure would follow an electric shock, fire or fume.

Failure to follow the above cautions may result, worst case, in a short circuit and cause fuming or partial dispersion when the product is used.

9.2 Caution (Storage and operating condition):

Operating and storage environment

The insulating coating of capacitors does not form a perfect seal; therefore, do not use or store capacitors in a corrosive atmosphere, especially where chloride gas, sulfide gas, acid, alkali, salt or the like are present. And avoid exposure to moisture. Before cleaning, bonding, or molding this product, verify that these processes do not affect product quality by testing the performance of a cleaned, bonded or molded product in the intended equipment. Store the capacitors where the temperature and relative humidity do not exceed –10 to 40 degrees centigrade and 15 to 85 % for 6 months maximum and use within the period after receiving the capacitors.

"Failure to follow the above cautions may result, worst case, in a short circuit and cause fuming or partial dispersion when the product is used."

9.3 Caution (Soldering and Mounting):

9.3.1 Vibration and impact:

Do not expose a capacitor or its leads to excessive shock or vibration during use.

9.3.2 Soldering:

When soldering this product to a PCB/PWB, do not exceed the solder heat resistance specification of the capacitor. Subjecting this product to excessive heating could melt the internal junction solder and may result in thermal shocks that can crack the ceramic element.

When soldering capacitor with a soldering iron, it should be performed in following conditions.

Temperature of iron-tip: 400 degrees C. max.

Soldering iron wattage: 50W max.

Soldering time: 3.5 sec. max.

9.3.3 Cleaning (ultrasonic cleaning):

To perform ultrasonic cleaning, observe the following conditions.

Rinse bath capacity: Output of 20 watts per liter or less.

Rinsing time: 5 min maximum.

Do not vibrate the PCB/PWB directly.

Excessive ultrasonic cleaning may lead to fatigue destruction of the lead wires.

"Failure to follow the above cautions may result, worst case, in a short circuit and cause fuming or partial dispersion when the product is used."

9.4 Caution (Handling):

Vibration and impact

Do not expose a capacitor or its leads to excessive shock or vibration during use.

"Failure to follow the above cautions may result, worst case, in a short circuit and cause fuming or partial dispersion when the product is used."

10. Soldering Recommendation：

10.1 Wave Soldering Profile:

- Temperature conditions of the flow is recommended as shown in the chart
- Must implement the pre-heat
- Maximum peak flow temperature is recommended 265℃
- Time " T " implement in the chart recommended within 20 sec. it temperature exceed 200℃
- Take care with the flow solder not to touch the capacitor body directly at mounting

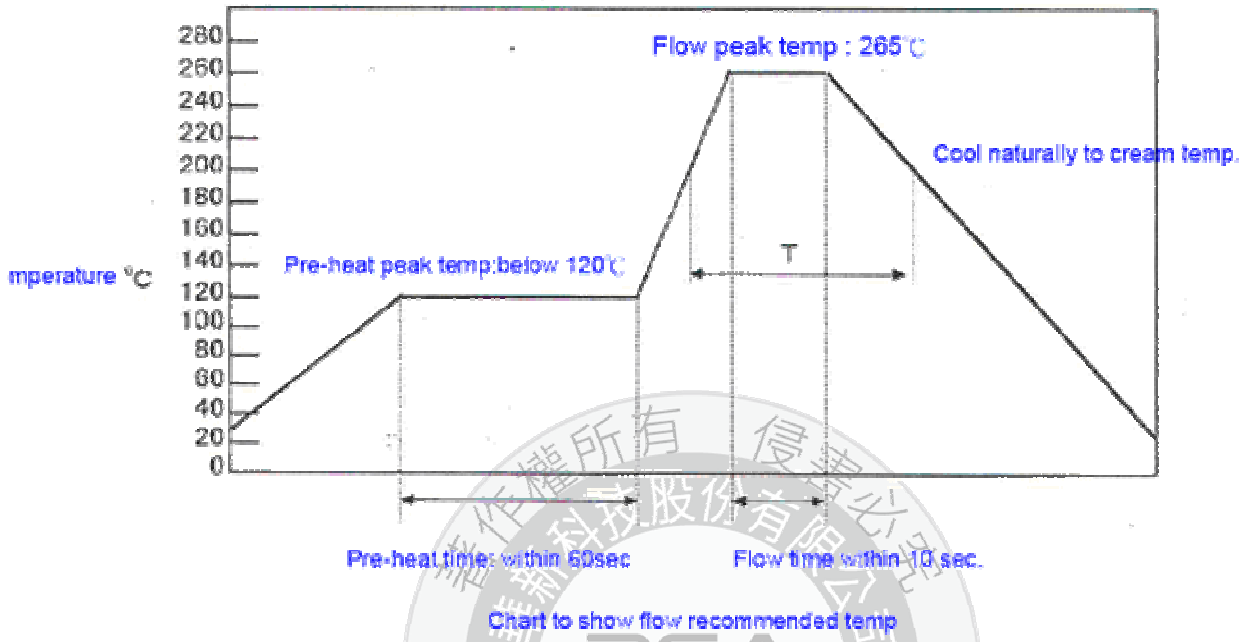

Chart to show flow recommended temp

10.2 Recommended Reworking Conditions with Soldering Iron：

- Temperature of iron-tip: 400 degrees C. max.
- Soldering iron wattage: 50W max.
- Soldering time: 3.5 sec. max.
- Distance from coating body: 2 mm (min.)

10.3 Reflow-Soldering：Lead Ceramic Cap. should not be soldered by reflow-soldering.

11. Drawing of internal structure and material list：

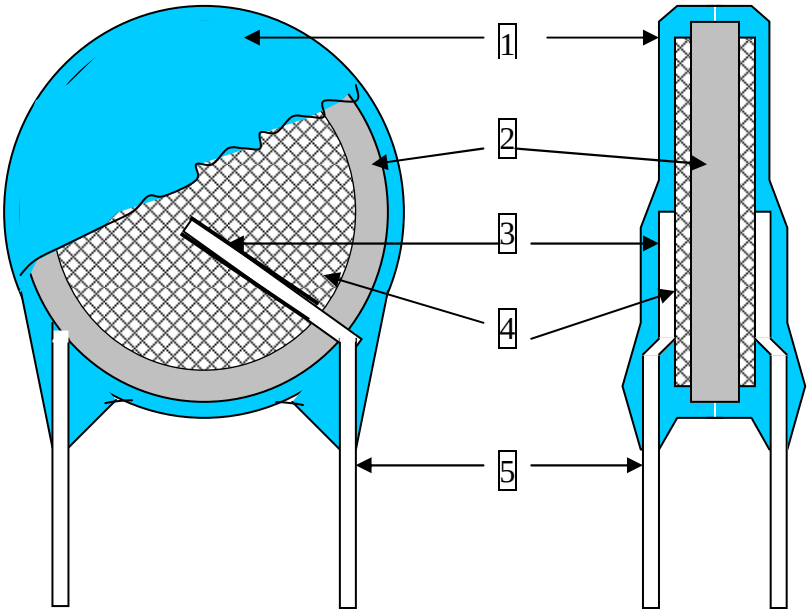

Remarks：

No.	Part name	Material	Model/Type	Component
1	Insulation Coating	Epoxy polymer	1.EF-150 2.PCE-300	Epoxy resin、Pigment (Blue / UL 94 V-0)
2	Dielectric Element	Ceramic	SL/Y5P/Y5U/Y5V	$BaTiO_3$
3	Solder	Tin-silver	Sn96.5-Ag3-Cu0.5	Sn96.5-Ag3-Cu0.5
4	Electrodes	Ag	1.SP-160PL 2.SP-260PL	Silver、Glass frit
5	Leads wire	Tinned copper clad steel wire	0.55±0.05 mm	Substrate metal: Fe & Cu Surface plating: Sn 100%(3~7μm)