PRODUCT SPECIFICATION

PRODUCT: CERAMIC DISC CAPACITOR SAFETY RECOGNIZED

TYPE: AS SERIES

CUSTOMER: _____

DOC. NO.: POE-D18-00-E-04

APPROVED BY CUSTOMER

VENDOR：

☐ **WALSIN TECHNOLOGY CORPORATION**
566-1, KAO SHI ROAD,YANG-MEI
TAO-YUAN, TAIWAN

☐ **PAN OVERSEAS (GUANGZHOU) ELECTRONIC CO.,LTD.**
NO.277,HONG MING ROAD,EASTERN SECTION,
GUANG ZHOU ECONOMIC AND TECHNOLOGY
DEVELOPMENT ZONE,CHINA

☐ **DONGGUAN WALSIN TECHNOLOGY ELECTRONICS CO., LTD.**
NO.638, MEI JING WEST ROAD,XINIUPO,ADMINISTRATIVE
ZONE,DALANGTOWN,DONGGUAN CITY, GUANGDONG PROVINCE

MANUFACTURE SITE：

☑ **PAN OVERSEAS (GUANGZHOU) ELECTRONIC CO.,LTD.**
NO.277,HONG MING ROAD,EASTERN SECTION,
GUANG ZHOU ECONOMIC AND TECHNOLOGY
DEVELOPMENT ZONE,CHINA

☐ **DONGGUAN WALSIN TECHNOLOGY ELECTRONICS CO., LTD.**
NO.638, MEI JING WEST ROAD,XINIUPO,ADMINISTRATIVE
ZONE,DALANGTOWN,DONGGUAN CITY, GUANGDONG PROVINCE

WALSIN

POE

Record of change

Date	Version	Description	page
2014/11/19	0	First edition.	all
2016/1/27	1	1. Review the Available lead code of Lead Configuration. 2. Revised standard NO. of VDE.	5 9
2019/1/18	2	1. Revised recognized NO. of CQC and ENEC (DEMKO).	9
2019/4/1	3	1. Add CQC approval marking on the body.	8
2019/4/24	4	1. "Protrusion length": "2.0max (Or the end of lead wire may be inside the tape.)" revised to "+0.5to-1.0 (Or the end of lead wire may be inside the tape.)" 2. Add "Soldering Recommendation"	7 18

Table of Contents

1. Part number for SAP system:

(Ex.)	YU	0AS	472	M	14	0	L	20	C	0	H
	(1)	(2)	(3)	(4)	(5)	(6)	(7)	(8)	(9)	(10)	(11)

(1)Temperature characteristic (identified code)

CODE	Temperature characteristic	Cap. Change
YP	Y5P	±10%
YU	Y5U	-55% to +20%

(2)TYPE (identified by 3-figure code)：0AS = AS Type(X1:760V~/Y1:500V~),

(3)Capacitance (identified by 3-figure code):EX.472=4700pF

(4)Capacitance tolerance (identified by code): K:±10%,M:±20%

(5)Nominal body diameter dimension (identified by 2-figure code): 07--Dmax8.0mm, 08--Dmax9.0mm...

(6)Internal code: 0--Normal, other code--Special control

(7)Lead Style：Refer to “2. Mechanical”.

(8)Packing mode and lead length (identified by 2-figure code)

Taping Code	Description
AM	Ammo box and product pitch：25.4 mm

Bulk Code	Description
03	Lead length ： 3.0mm
3E	Lead length ： 3.5mm
04	Lead length ： 4.0mm
4E	Lead length ： 4.5mm
20	Lead length ： 20mm

(9)Length tolerance

Code	Description
A	±0.5 mm (only for kink lead type)
B	±1.0 mm
C	Min.
D	Taping special purpose

(10)Pitch

Code	Description
0	10±1 mm
A	10±0.5 mm
C	12.5± 0.8 mm

(11)Epoxy Resin Code

Code	Description
H	Halogen and Pb free, epoxy resin.

2. Mechanical:

Encapsulation：Epoxy resin, flammability UL94 V-0

Available lead code (unit: mm):

Lead type	SAP P/N (13-17)digits	Pitch (F)	Lead Length (L)	Packing	Lead Configuration
Lead style：L or B Type L or B Straight long lead	L03B0	10 ± 1.0	3.0 ± 1.0	Bulk	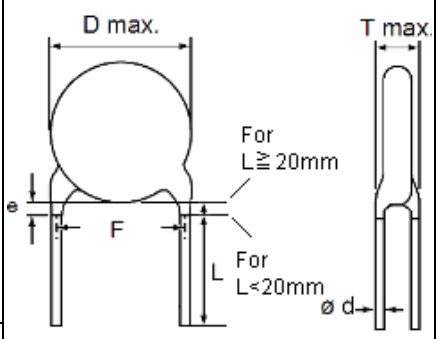
	L4EB0	10 ± 1.0	4.5 ± 1.0		
	L05B0	10 ± 1.0	5.0 ± 1.0		
	L03BC	12.5 ± 0.8	3.0 ± 1.0		
	L3EAC	12.5 ± 0.8	3.5 ± 0.5		
	L4EBC	12.5 ± 0.8	4.5 ± 1.0		
	L20C0	10 ± 1.0	20 min.		
	L20CC	12.5 ± 0.8	20 min.		
	BAMD0	10 ± 1.0	Refer to “4. Taping format”	Tap. Ammo	
Lead style：G Type G Straight lead	G03B0	10 ± 1.0	3.0 ± 1.0	Bulk	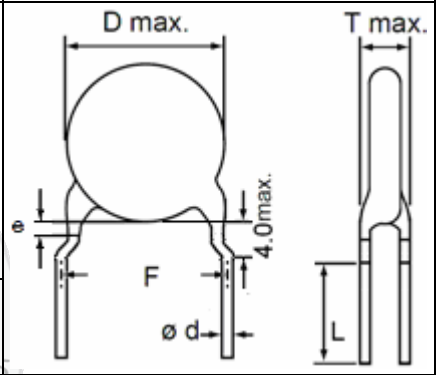
	G4EB0	10 ± 1.0	4.5 ± 1.0		
	G05B0	10 ± 1.0	5.0 ± 1.0		
	GAMD0	10 ± 1.0	Refer to “4. Taping format”	Tap. Ammo	
Lead style：D Type D Vertical kink lead	D03A0	10 ± 1.0	3.0 ± 0.5	Bulk	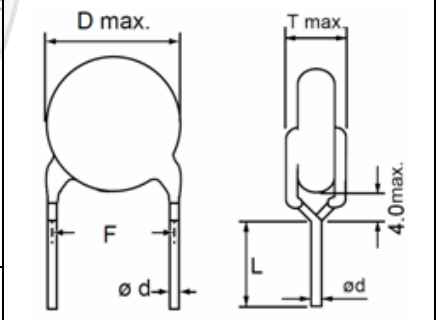
	D3EA0	10 ± 1.0	3.5 ± 0.5		
	D04A0	10 ± 1.0	4.0 ± 0.5		
	D03AC	12.5 ± 0.8	3.0 ± 0.5		
	D3EAC	12.5 ± 0.8	3.5 ± 0.5		
	D04AC	12.5 ± 0.8	4.0 ± 0.5		
	DAMD0	10 ± 1.0	Refer to “4. Taping format”	Tap. Ammo	
Lead style：X Type X Outside kink lead	X03A0	10 ± 1.0	3.0 ± 0.5	Bulk	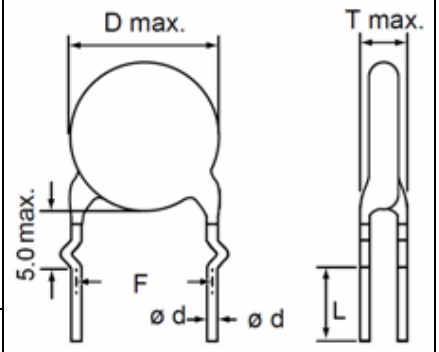
	X3EA0	10 ± 1.0	3.5 ± 0.5		
	X04A0	10 ± 1.0	4.0 ± 0.5		
	X03AC	12.5 ± 0.8	3.0 ± 0.5		
	X3EAC	12.5 ± 0.8	3.5 ± 0.5		
	X04AC	12.5 ± 0.8	4.0 ± 0.5		
	XAMD0	10 ± 1.0	Refer to “4. Taping format”	Tap. Ammo	

***** Lead diameter Φd: 0.55 +/-0.05mm

*e (Coating **extension** on leads): 3.0mmMax for straight lead style, not exceed the kink for kink lead.

3. Part numbering/T.C/Capacitance/ Tolerance/Diameter：

SAP P/N	T.C.	Capacitance(pF)	Tolerance	Dimension (unit:mm)				
				D(max.)	T(max.)	F		Φd
						Bulk	Tap.	
YP*AS101K070*	Y5P	100 pF	±10%	8.0	5.5	10.0 Or 12.5	10	0.55+/-0.05
YP*AS151K070*		150 pF		8.0				
YP*AS221K070*		220 pF		8.0				
YP*AS331K070*		330 pF		8.0				
YP*AS471K080*		470 pF		9.0				
YP*AS561K090*		560 pF		10.0				
YP*AS681K090*		680 pF		10.0				
YP*AS102K110*		1000 pF		12.0				
YU*AS102M080*	Y5U	1000 pF	±20%	9.0				
YU*AS152M090*		1500 pF		10.0				
YU*AS222M120*		2200 pF		13.0				
YU*AS332M120*		3300 pF		13.0				
YU*AS392M130*		3900 pF		14.0				
YU*AS472M140*		4700 pF		15.0				

- The minimum thickness of coating (reinforced insulation) is 0.4mm.

4. Taping format:

- **25.4mm pitch/lead spacing 10.0mm taping**

Lead Code:*BAMD0 & *DAMD0 & *XAMD0 & *GAMD0

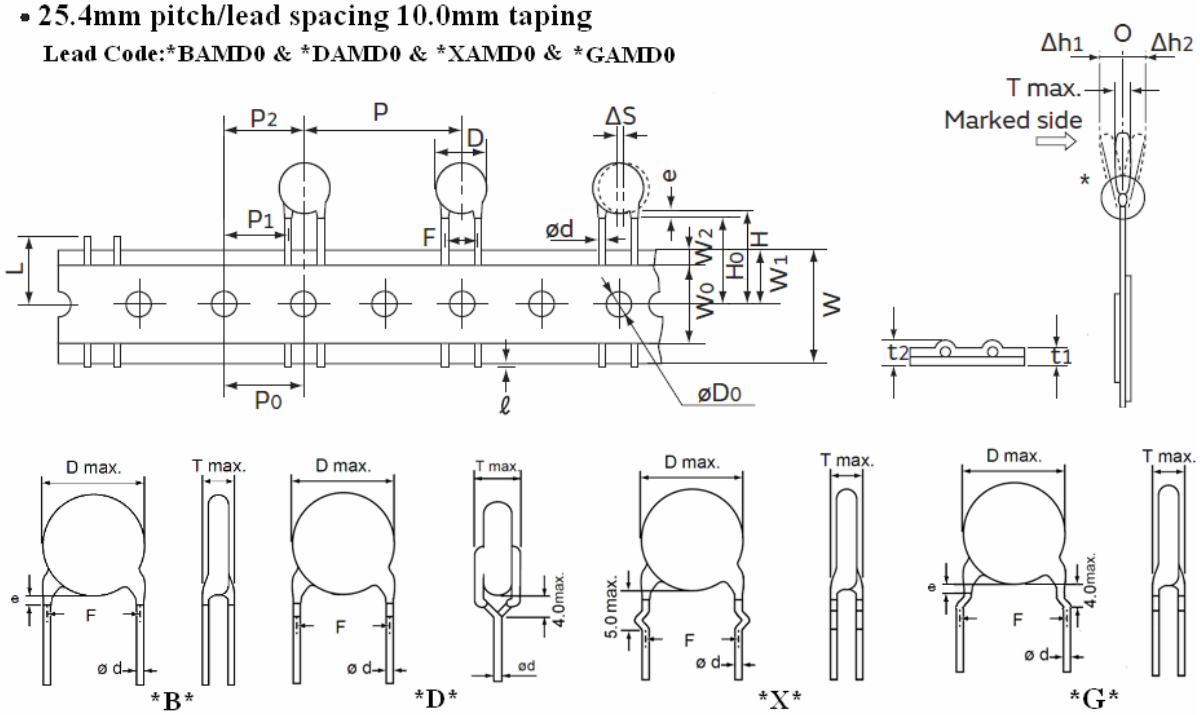

POE Part Number		*BAMD0 / *DAMD0 / *XAMD0 / *GAMD0
Item	Symbol	Dimensions(mm)
Pitch of component	P	25.4 ± 2
Pitch of sprocket	P0	12.7 ± 0.3
Lead spacing	F	10.0 ± 1.0
Length from hole center to component center	P2	12.7 ± 1.5
Length from hole center to lead	P1	7.7 ± 1.5
Body diameter	D	See the "3. Part numbering/T.C/Capacitance/ Tolerance/Diameter"
Deviation along tape, left or right	△S	0 ± 2.0
Carrier tape width	W	18.0 +1/ -0.5
Position of sprocket hole	W1	9.0 ± 0.5
Lead distance between the kink and center of sprocket hole	H0	18.0 +2.0/-0 (For: *DAMD0 & *XAMD0 & *GAMD0)
Lead distance between the bottom of body and the center of sprocket hole	H	20.0+1.5/-1.0 (For: *BAMD0)
Length from the terminal of the lead wire to the edge of carrier tape	ℓ	+0.5 to -1.0 (Or the end of lead wire may be inside the hole-down tape.)
Diameter of sprocket hole	D0	4.0 ± 0.2
Lead diameter	φd	0.55 ±0.05
Total tape thickness	t1	0.6 ± 0.3
Total thickness, tape and lead wire	t2	1.5 max.
Deviation across tape	△h1	2.0 max.
	△h2	2.0 max
Portion to cut in case of defect	L	11.0 max.
Hole-down tape width	W0	8.0 min
Hole-down tape distortion	W2	1.5 ± 1.5
Coating extension on leads	e	3.0 max for straight lead style; Not exceed the kink leads for kink lead.
Body thickness	T	See the "3. Part numbering/T.C/Capacitance/ Tolerance/Diameter"

5. Marking:

1.Type Designation	**AS**
2.Nominal Capacitance	Identified by 3-Figure Code. Ex. 100pF→"101"，4700pF→"472"
3.Capacitance Tolerance	K:±10%,M:±20%
4.Company Name Code(Trade mark)	UK
5. Products ID	Abbreviation ex.: Manufacture year: ← 9 C 6 1234 → Last 4 digits of lot no.; → Individual specification code; → Manufacture month: 1:January, 2:Feruary, ⋮, 9:September, O:October, N:November, D:December; 9:2019, 0:2020, 1:2021, ⋮; Manufactory: C:Pan overseas (Guangzhou); Epoxy resin code: "_": Haglogen and Pb free epoxy resin (For the last code "H" and "B" of SAP P/N)
6.Approved Monogram:	
(1) VDE approval mark	IEC 60384-14 Class code：X1：760V~，Y1：500V~
(2) UL approval mark	or C
Marking sample	
Two sides marking（for SAP part number 10-11 digits ≤ "07" products）	**One side marking（for SAP part number 10-11 digits ≥ "08" products）**
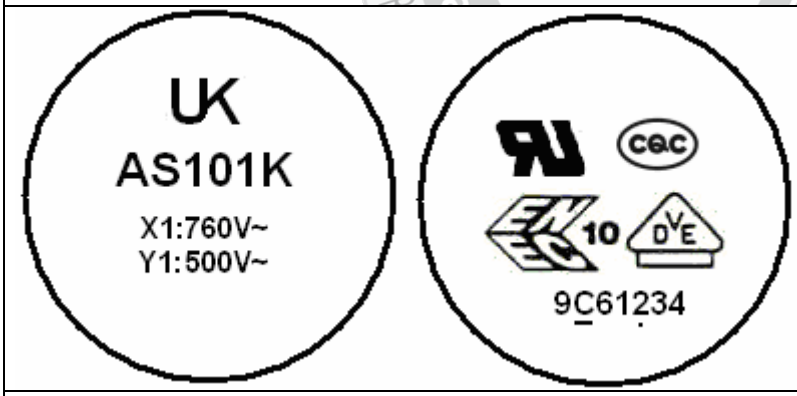	

* Marking by the laser.

* "C"：Marked with code " _ " stand for Halogen and Pb free epoxy resin.

* " • "：Individual specification code, it is added under the lot no.

6. Scope:

This specification applies to ceramic insulated capacitors disk type used in electronic equipment.

6.1Applicable safety standard

This specification applies to the VDE, ENEC10,UL/CUL approved ceramic capacitors disc type for antenna coupling, line-by-pass and across-the-line. X1, Y1 capacitor based on IEC60384-14.

6.2 Safety standards approval and recognized no.

Safety Standard	Standard No.	Subclass	W.V.	Recognized No.
UL/CUL	ANSI/UL 60384-14:2013	X1	760VAC	E146544 (FOWX2/FOWX8)
		Y1	500VAC	
VDE (ENEC)	EN 60384-14:2013 IEC60384-14:2013	X1	760VAC	40039265
		Y1	500VAC	
ENEC (DEMKO)	EN 60384-14:2013/ A1:2016, EN 60384-14:2013	X1	760VAC	ENEC-01964-A1
		Y1	500VAC	
CQC	GB/T6346.14-2015	X1	760VAC	CQC18001186964
		Y1	500VAC	

7. Specification and test method:

7.1 Operating Temperature Range: -40 to +125°C

7.2 Test condition:

Test and measurement shall be made at the standard condition. (temperature 15~35℃, relative humidity 45~75% and atmospheric pressure 860~1060hpa). Unless otherwise specified herein.

If doubt occurred on the value of measurement, and measurement was requested by customer capacitors shall be measured at the reference condition. (temperature 20±2℃or25 ± 2℃, relative humidity 60~70% and atmospheric pressure 860~1060hpa.)

7.3 Performance:

<table>
<tr><th>No</th><th colspan="2">Items</th><th>Performance</th><th>Testing method</th></tr>
<tr><td>7.3.1</td><td colspan="2">Appearance
And dimension</td><td>The appearance and dimension shall be as given in section 3.</td><td>Visual check.</td></tr>
<tr><td>7.3.2</td><td colspan="2">Marking</td><td>The marking shall be easily legible. (As given section 5)</td><td>Visual check.</td></tr>
<tr><td rowspan="2">7.3.3</td><td rowspan="2">Withstand voltage</td><td>Between terminals</td><td>No failure.</td><td>The capacitors shall not be damage when AC4000V (rms.) are applied between the lead wires for 60sec. (Charge/Discharge current □ 50mA.)</td></tr>
<tr><td>Body Insulation</td><td>No failure.</td><td>First. The terminals of the capacitor shall be closely wrapped around the body of the capacitor distance of about 3 to 4mm from each terminal. Then, the capacitor shall be inserted into a container filled with metal balls of about 1mm diameter. Finally, AC4000V (rms.) is applied for 60sec between the capacitor lead wires and metal balls. (Charge/Discharge current □ 50mA.)</td></tr>
<tr><td>7.3.4</td><td>Insulation Resistance</td><td>Between terminals</td><td>10000MΩ or more.</td><td>The insulation resistance shall be measured with DC500±50V within 60±5sec of charging.</td></tr>
<tr><td>7.3.5</td><td colspan="2">Capacitance</td><td>Within specified tolerance.</td><td rowspan="2">Y5P&Y5U: The capacitance shall be measured at 20±2℃ with 1kHz±20% and 5V(rms.) or less.</td></tr>
<tr><td>7.3.6</td><td colspan="2">Dissipation Factor(tanδ) or Q</td><td>Y5P、Y5U：D.F.≦2.5%</td></tr>
<tr><td>7.3.7</td><td colspan="2">Temperature Characteristic</td><td><table><tr><th>Char.</th><th>Capacitance Change</th></tr><tr><td>Y5P</td><td>Within ± 10%</td></tr><tr><td>Y5U</td><td>Within $^{+20}_{-55}$%</td></tr></table></td><td>The capacitance measurement shall be made at each step specified in Table 1.
Table 1<table><tr><th>Step</th><th>Temperature (℃)</th></tr><tr><td>1</td><td>+20±2</td></tr><tr><td>2</td><td>-25±2</td></tr><tr><td>3</td><td>+20±2</td></tr><tr><td>4</td><td>+85±2</td></tr><tr><td>5</td><td>+20±2</td></tr></table>Pre-treatment:
Capacitor shall be stored at 85±2℃ for 1hour, then placed at ※1room condition for 24±2hours before measurements.</td></tr>
<tr><td>7.3.8</td><td colspan="2">Solderability of Leads</td><td>Lead wire should be soldered with uniform coating on the axial direction over 3/4 of the circumferential direction.</td><td>The lead wire of capacitor should be dipped into molten solder for 5 ± 0.5 sec.
The depth of immersion is up to about 1.5 to 2.0 mm from the root of lead wires.
Temp. of solder：Lead Free Solder (Sn-3Ag-0.5Cu) 245±5℃</td></tr>
</table>

No	Items		Performance	Testing method
7.3.9	Robustness of Terminations	Tensile	Lead wire shall not cut off. Capacitor shall not be broken.	With the termination in its normal position, the specimen is held by its body in such a manner that the axis of the termination is vertical; the tensile force of 10N shall be applied to the termination in the direction of its axis and acting in a direction away from the body of the specimen.
		Bending	Lead wire shall not cut off. Capacitor shall not be broken.	With the termination in its normal position, the specimen is held by its body in such a manner that the axis of the termination is vertical; a mass applying a force of 5N is then suspended from the end of the termination. The body of the specimen is then inclined, within a period of 2 to 3sec, through an angle of approximately 90° in the vertical plane and then returned to its initial position over the same period of time; this operation constitutes one bend. One bend immediately followed by a second bend in the opposite direction.
7.3.10	Soldering Effect (Non-Preheat)	Appearance	No marked defect.	As shown in figure, the lead wires should be immersed in solder of 350 ± 10 ℃ or 260 ± 5 ℃ up to 1.5 to 2.0 mm from the root of terminal for 3.5 ± 0.5 sec (10 ± 1 sec. for 260 ± 5 ℃). 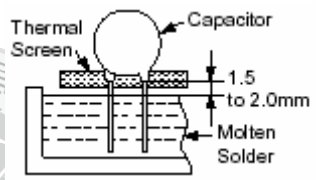 Pre-treatment: Capacitor shall be stored at 85±2℃ for 1hour.then placed at ※1room condition for 24±2hours before initial measurements. Post-treatment: Capacitor shall be stored for 1 to 2hours at ※1room condition.
		I.R.	1000 MΩ min.	
		Dielectric Strength	Per item7.3. 3	
		Capacitance	Y5P,Y5U： Within ±10 %	
7.3.11	Soldering Effect (On-Preheat)	Appearance	No marked defect.	First the capacitor should be stored at 120+0/-5 ℃ for 60 +0/-5 sec. Then , as in figure , the lead wires should be immersed solder of 260+0/-5 ℃ up to 1.5 to 2.0 mm from the root of terminal for 7.5+0/-1 sec. 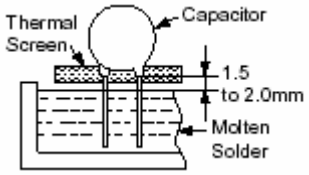 Pre-treatment: Capacitor shall be stored at 85±2℃ for 1hour.then placed at ※1room condition for 24±2hours before initial measurements. Post-treatment: Capacitor shall be stored for 1 to 2hours at ※1room condition.
		I.R.	1000 MΩ min.	
		Dielectric Strength	Per item 7.3.3	
		Capacitance	Y5P,Y5U：Within ±10 %	

No	Items		Performance	Testing method
7.3.12	Humidity (Under steady State)	Appearance	No marked defect.	Set the capacitor for 500±12hours at 40±2℃ in 90 to 95% relative humidity. Then capacitor shall be stored for 1 to 2 hours at ※1room condition.
		Capacitance	Y5P： Within ±10% Y5U： Within ±20%	
		D.F.	Y5P,Y5U：5.0% max.	
		I.R.	Y5P&Y5U：3000MΩmin.	
		Dielectric Strength	Per Item 7.3.3	
7.3.13	Humidity Loading	Appearance	No marked defect.	Apply the rated voltage for 500±12 hours at 40±2℃ in 90 to 95% relative humidity and set it for 1 to 2 hours at ※1room condition.
		Capacitance	Y5P： Within ±10% Y5U： Within ±20%	
		D.F.	Y5P,Y5U：5.0% max.	
		I.R.	Y5P&Y5U：3000MΩmin.	
		Dielectric Strength	Per Item 7.3.3	
7.3.14	Life	Appearance	No marked defect.	Impulse Voltage Each individual capacitor shall be subjected to 8kV impulses for three times. After the capacitors are applied to life test. Fig. 2 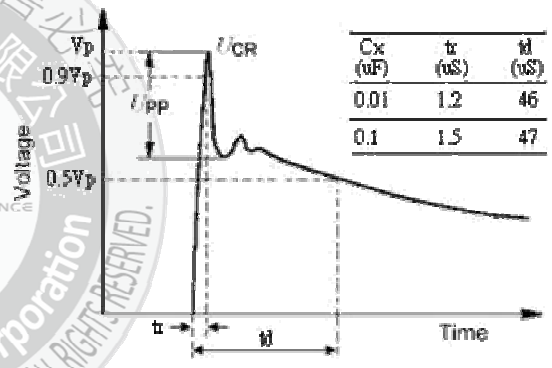 The specimen capacitors are placed in a circulating air oven for a period of 1000 hours. The air in the oven is maintained at a temperature of 125±3℃. Throughout the test, the capacitors are subjected to an AC850Vrms. alternating voltage of mains frequency, except that once each hour the voltage is increased to AC1000V(rms.) for 0.1 sec.
		Capacitance	Y5P&Y5U：Within ±20%	
		I.R.	3000MΩ min.	
		Dielectric Strength	Per Item 7.3 3	

<table>
<tr><th>No</th><th colspan="2">Items</th><th>Performance</th><th>Testing method</th></tr>
<tr><td>7.3.15</td><td colspan="2">Active Flammability</td><td>The cheesecloth shall not be on fire.</td><td>The specimens shall be individually wrapped in at least one but more than two complete layers of cheesecloth. The specimens shall be subjected to 20 discharges. The interval between successive discharges shall be 5 sec. The UAC shall be maintained for 2 min after the last discharge.
Fig. 6
 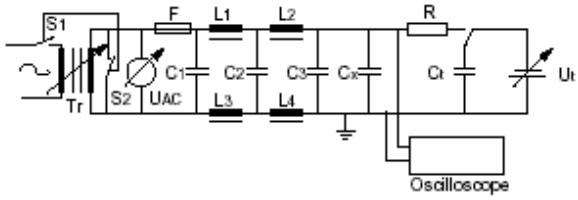

C1,2 : 1μF±10%
C3 : 0.033μF±5% 10kV
Ct : 3μF±5% 10kV
Cx : Capacitor under test
F : Fuse, Rated 10A
L1 to 4 : 1.5mH±20% 16A Rod core choke
R : 100Ω±2%
UAC : UR±5%
UR : Rated Voltage
Ut : Voltage applied to Ct
 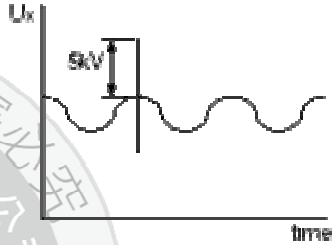
</td></tr>
<tr><td>7.3.16</td><td colspan="2">Passive Flammability</td><td>The burning time shall not be exceeded the time 30 sec. The tissue paper shall not ignite.</td><td>The capacitor under test shall be held in the position which best promotes burning. Each specimen shall only be exposed once to flame. Time of exposure to flame: 30sec.
Length of flame : 12±1mm
Gas burner : Length 35mm min.
Inside Dia. : 0.5±0.1mm
Outside Dia. : 0.9mm max.
Gas : Butane gas Purity 95% min.
Fig. 7
 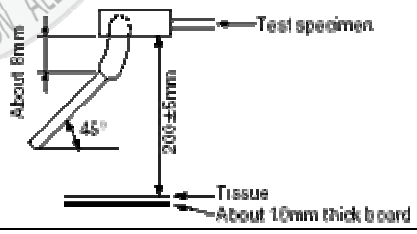
</td></tr>
<tr><td>7.3.17</td><td>Temperature Cycle</td><td>Appearance
Char. | Cap. Change | DF
Y5P | ≦±10% | DF≦5.0%
Y5U | ≦±20% | DF≦7.5%
I.R.
Dielectric strength</td><td>No marked defect
3000MΩ min.
Per Item 7.3.3</td><td>The capacitor should be subjected to 5 temperature cycles,
<Temperature Cycle time: 5cycles>
Step | Temperature(℃) | Time(min)
1 | -40+0/-3 | 30
2 | Room temp. | 3
3 | 125+3/-0 | 30
4 | Room temp. | 3
Pre-treatment:
Capacitor shall be stored at 85±2℃ for 1hour.then placed at※1room condition for 24±2hours.
Post-treatment:
Capacitor shall be stored for 1 to 2hours at ※1room condition.</td></tr>
</table>

※1"room condition" Temperature:15~35, Relative humidity: 45~75%, Atmospheric pressure:86~106kPa

8.Packing Baggage：

8.1 Packing size:

Type	Box	Carton
Bulk	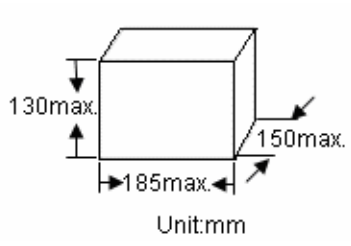	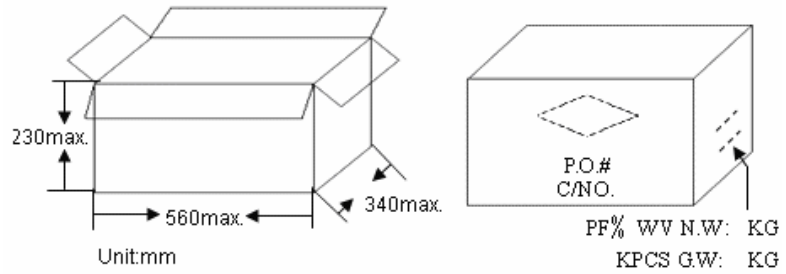
Ammo taping	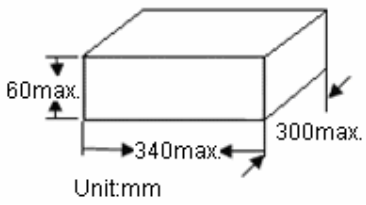	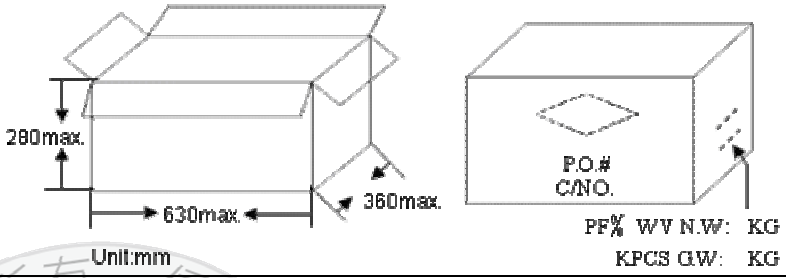

8.2 Packing quantity:

Packing type	The code of 14th to15th in SAP P/N	MPQ (Kpcs/Box)
Taping	AM (The size code≦11)	1
	AM (The size code≧12)	0.5

Packing type	Lead length	Size code of 10th to 11th in SAP P/N	MPQ (Kpcs/Bag)	Kpcs/Box
Bulk	Long lead (L≧20mm)	06~12	0.5	1.5
		13-15	0.5	1
	Short lead (L＜20mm)	06~14	0.5	2
		15	0.2	1
	All	16	0.2	1

9. Notices:

9.1 Caution (Rating):

(1). Operating Voltage

Be sure to maintain the Vp-p value of the applied voltage or the Vo-p which contains DC bias within the rated voltage range.

When the voltage is started to apply to the circuit or it is stopped applying, the irregular voltage may be generated for a transit period because of resonance or switching. Be sure to use a capacitor within rated voltage containing this irregular voltage.

Voltage	DC Voltage	DC+AC Voltage	AC Voltage	Pulse Voltage (1)	Pulse Voltage (2)
Positional Measurement	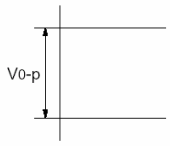	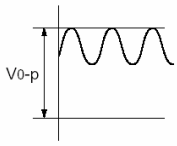	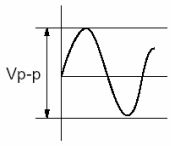	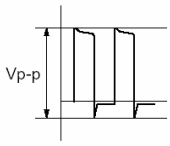	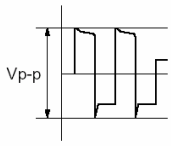

(2). Operating Temperature and Self-generated Heat

Keep the surface temperature of a capacitor below the upper limit of its rated operating temperature range. Be sure to take into account the heat generated by the capacitor itself. When the capacitor is used in a high-frequency current, pulse current or the like, it may have the self-generated heat due to dielectric-loss.

Applied voltage should be the load such as self-generated heat is within 20℃ on the condition of atmosphere temperature 25℃. When measuring, use a thermocouple of small thermal capacity-K of φ0.1mm and be in the condition where capacitor is not affected by radiant heat of other components and wind of surroundings. Excessive heat my lead to deterioration of the capacitor's characteristics and reliability.

(3). Test condition for withstanding Voltage

I. Test Equipment

Test equipment for AC withstanding voltage shall be used with the performance of the wave similar to 50/60 Hz sine waves.

If the distorted sine wave or over load exceeding the specified voltage value is applied, the defective may be caused.

II. Voltage Applied Method

When the withstanding voltage is applied, capacitor's lead or terminal shall be firmly connected to the output of the withstanding voltage test equipment, and then the voltage shall be raised from near zero to the test voltage.

If the test voltage without the raise from near zero voltage would be applied directly to capacitor, test voltage should be applied with the *zero cross. At the end of the test time, the test voltage shall be reduced to near zero, and then capacitor's lead or terminal shall be taken off the output of the withstanding voltage test equipment.

If the test voltage without the raise from near zero voltage would be applied directly to capacitor, the surge voltage may arise, and therefore, the defective may be caused.

ZERO CROSS is the point where voltage sine wave pass 0V.- See the right figure.

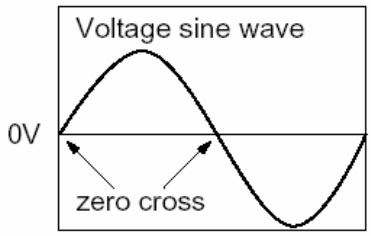

(4). Fail-Safe

When capacitor would be broken, failure may result in a short circuit. Be sure to provide an appropriate fail-safe function like a fuse on your product if failure would follow an electric shock, fire or fume.

Failure to follow the above cautions may result, worst case, in a short circuit and cause fuming or partial dispersion when the product is used.

9.2 Caution (Storage and operating condition):

Operating and storage environment

The insulating coating of capacitors does not form a perfect seal; therefore, do not use or store capacitors in a corrosive atmosphere, especially where chloride gas, sulfide gas, acid, alkali, salt or the like are present. And avoid exposure to moisture. Before cleaning, bonding, or molding this product, verify that these processes do not affect product quality by testing the performance of a cleaned, bonded or molded product in the intended equipment. Store the capacitors where the temperature and relative humidity do not exceed –10 to 40 degrees centigrade and 15 to 85 % for 6 months maximum and use within the period after receiving the capacitors.

"Failure to follow the above cautions may result, worst case, in a short circuit and cause fuming or partial dispersion when the product is used."

9.3 Caution (Soldering and Mounting):

9.3.1 Vibration and impact:

Do not expose a capacitor or its leads to excessive shock or vibration during use.

9.3.2 Soldering:

When soldering this product to a PCB/PWB, do not exceed the solder heat resistance specification of the capacitor. Subjecting this product to excessive heating could melt the internal junction solder and may result in thermal shocks that can crack the ceramic element.

When soldering capacitor with a soldering iron, it should be performed in following conditions.

Temperature of iron-tip: 400 degrees C. max.

Soldering iron wattage: 50W max.

Soldering time: 3.5 sec. max.

9.3.3 Cleaning (ultrasonic cleaning):

To perform ultrasonic cleaning, observe the following conditions.

Rinse bath capacity: Output of 20 watts per liter or less.

Rinsing time:5 min maximum.

Do not vibrate the PCB/PWB directly.

Excessive ultrasonic cleaning may lead to fatigue destruction of the lead wires.

"Failure to follow the above cautions may result, worst case, in a short circuit and cause fuming or partial dispersion when the product is used."

9.4 Caution (Handling):

Vibration and impact

Do not expose a capacitor or its leads to excessive shock or vibration during use.

"Failure to follow the above cautions may result, worst case, in a short circuit and cause fuming or partial dispersion when the product is used."

10. Soldering Recommendation:

10.1 Wave Soldering Profile:

- Temperature conditions of the flow is recommended as shown in the chart
- Must implement the pre-heat
- Maximum peak flow temperature is recommended 265℃
- Time " T " implement in the chart recommended within 20 sec. it temperature exceed 200℃
- Take care with the flow solder not to touch the capacitor body directly at mounting

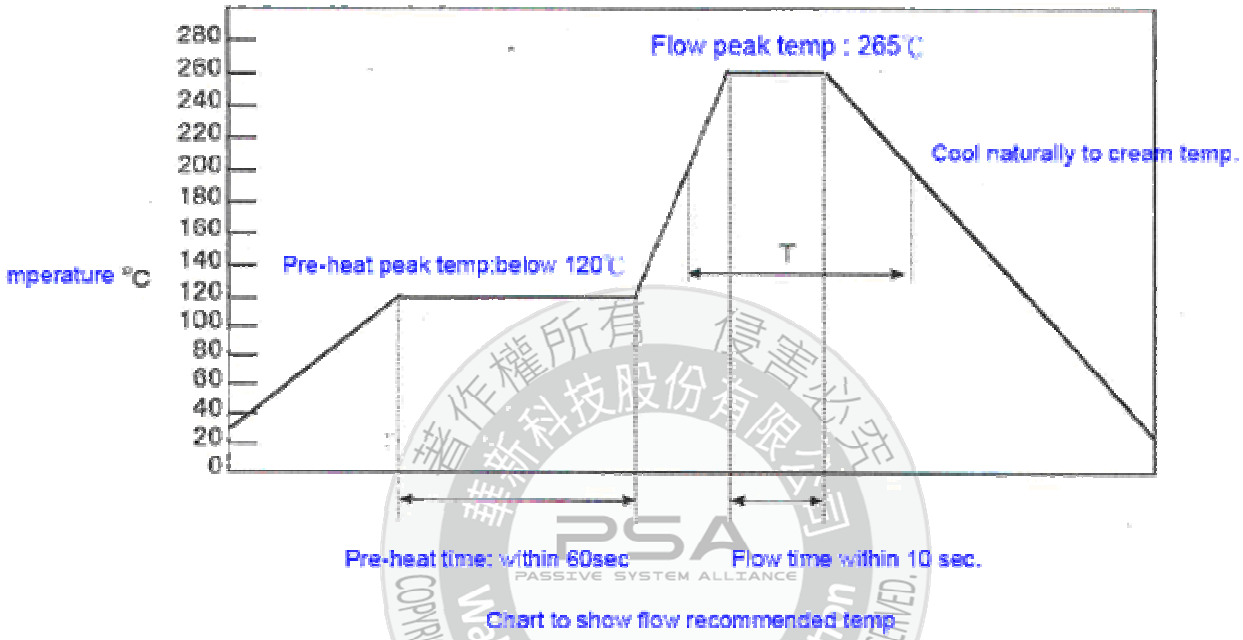

Chart to show flow recommended temp

10.2 Recommended Reworking Conditions with Soldering Iron：

- Temperature of iron-tip: 400 degrees C. max.
- Soldering iron wattage: 50W max.
- Soldering time: 3.5 sec. max.
- Distance from coating body: 2 mm (min.)

10.3 Reflow-Soldering：Lead Ceramic Cap. should not be soldered by reflow-soldering.

11. Drawing of internal structure and material list：

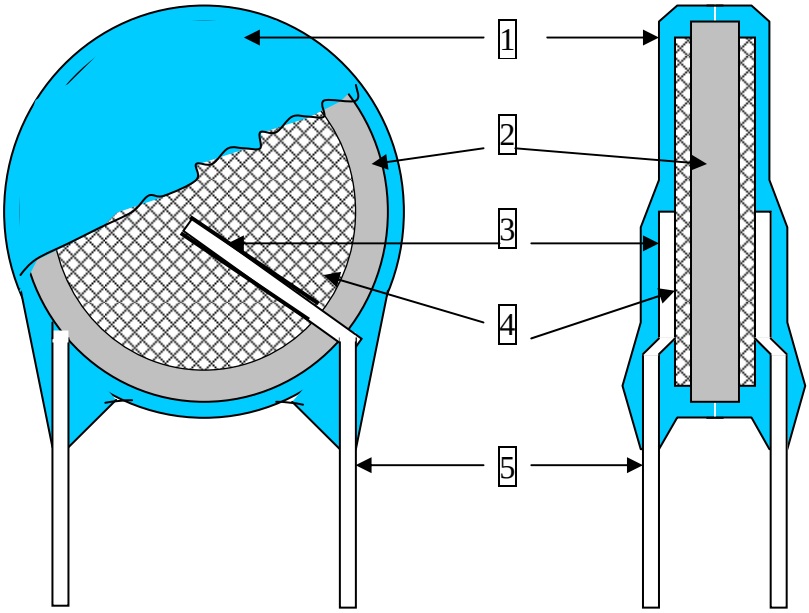

Remarks：

No.	Part name	Material	Model/Type	Component
1	Insulation Coating	Epoxy polymer	1.EF-150 2.PCE-300	Epoxy resin、Pigment (Blue / UL 94 V-0) The minimum thickness of coating (reinforced insulation) is 0.4mm
2	Dielectric Element	Ceramic	Y5P/Y5U	$BaTiO_3$
3	Solder	Tin-silver	Sn96.5-Ag3-Cu0.5	Sn96.5-Ag3-Cu0.5
4	Electrodes	Ag	1.SP-160PL 2.SP-260PL	Silver、Glass frit
5	Leads wire	Tinned copper clad steel wire	0.55±0.05mm	Substrate metal: Fe & Cu Surface plating: Sn 100%(3~7μm)